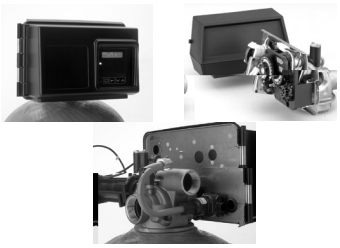

Service Manual

Downflow: **Upflow** **Upflow Variable**

a a

Timer Program Settings:

a R

Drain Line Flow Control:

3200 TIMER SETTING PROCEDURE

How To Set Days On Which Water Conditioner Is To Regenerate (Figure 2)

a

How To Set The Time Of Day

How To Manually Regenerate Your Water Conditioner At

a a

How to Adjust Regeneration Time

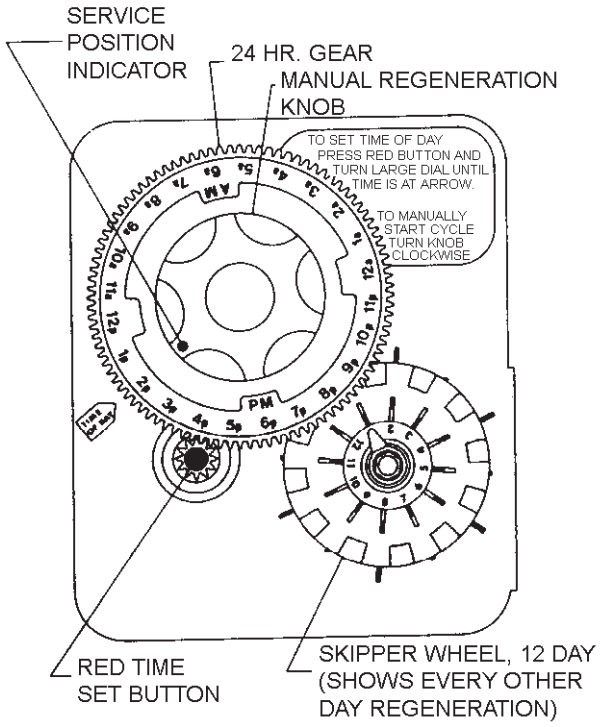

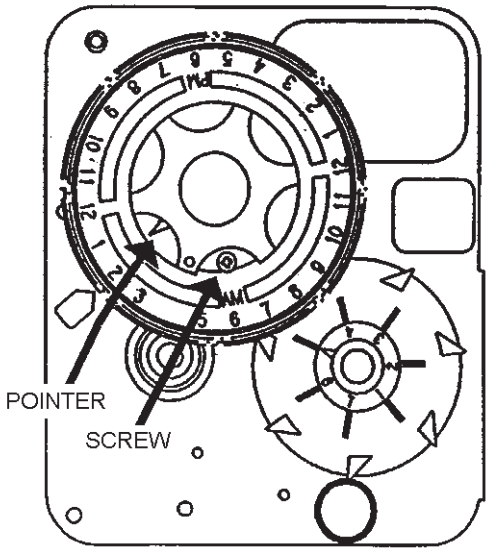

3200 ADJUSTABLE REGENERATION TIMER

IMPORTANT!
SALT LEVEL MUST ALWAYS BE ABOVE WATER LEVEL IN BRINE TANK

F

3210 TIMER SETTING PROCEDURE

Typical Programming Procedure

NOTE: Drawing shows 8,750 gallon setting. The capacity (gallons) arrow (15) shows zero gallons remaining. The unit will regenerate tonight at the set regeneration time.

How To Set The Time Of Day

How To Manually Regenerate Your Water Conditioner At

a

Immediate Regeneration Timers

NOTE: The program wheel to the left may be different than the program wheel on the product.

NOTE:To set meter capacity rotate manual knob one - 360° revolution to set gallonage.

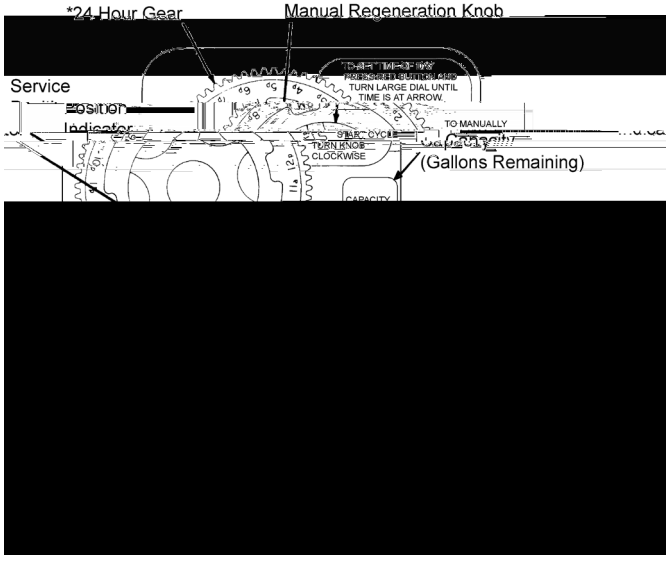

C O 35

3200, 3210, 3220, 3230 REGENERATION CYCLE SETTING PROCEDURE

How To Set The Regeneration Cycle Program

a , a

3200 Series Timers (Figure 4)

a

How To Change The Length Of Brine Tank Refll Time

a (

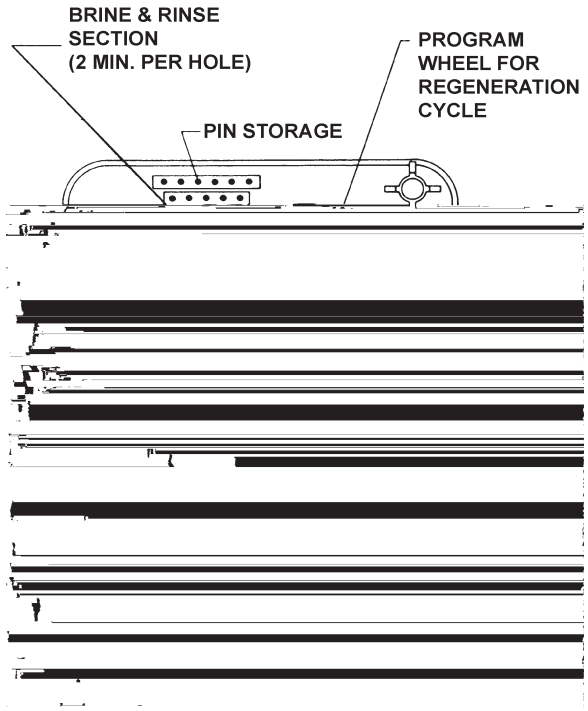

Timer Setting Procedure

How To Change The Length Of The Backwash Time

How To Change The Length Of Brine And Rinse Time

How To Change The Length Of Rapid Rinse

F

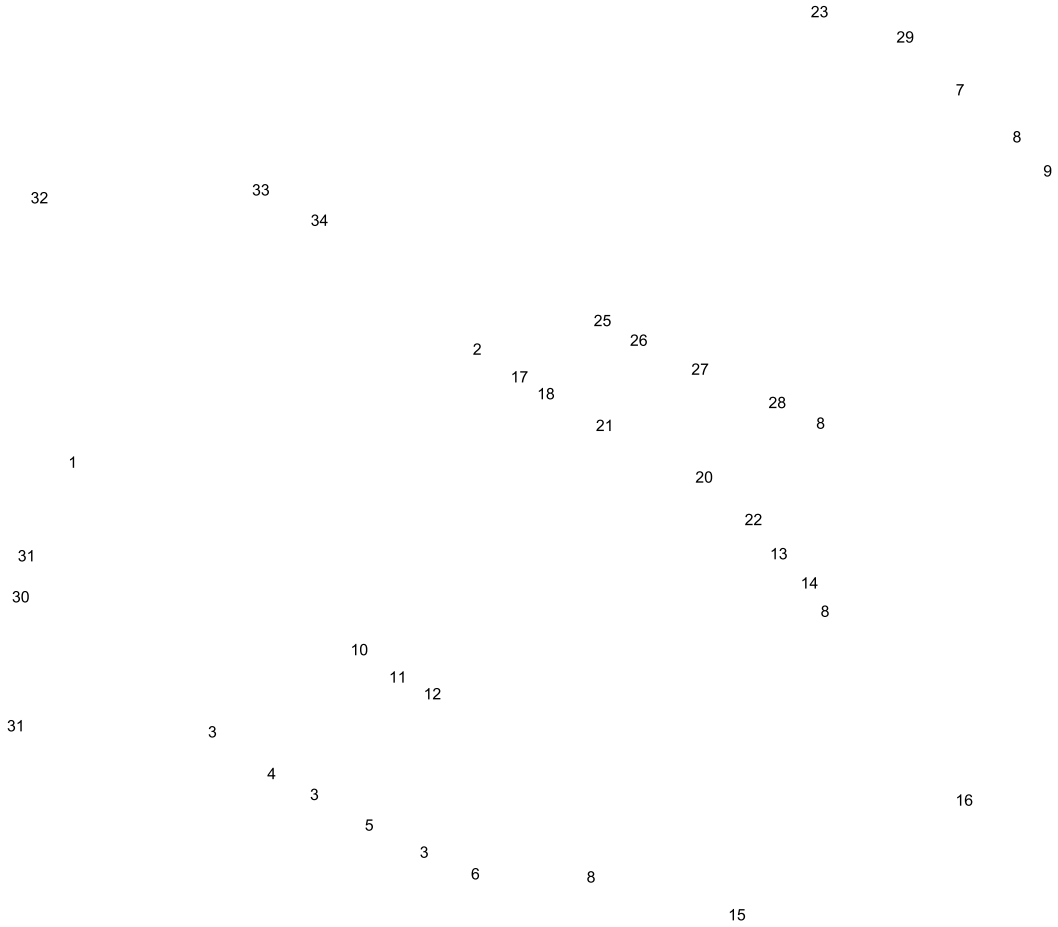
23
29
7
8
9
33
32
34
25
26
2
27
17
18
28
21
8
1
20
22
31
13
14
30
8
10
11
12
31
3
4
3
16
5
3
6
8
15

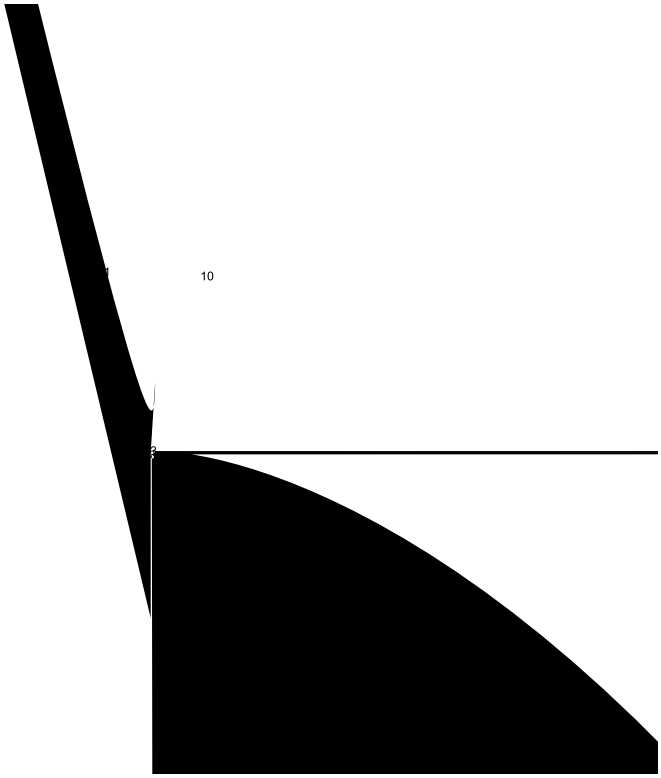
10

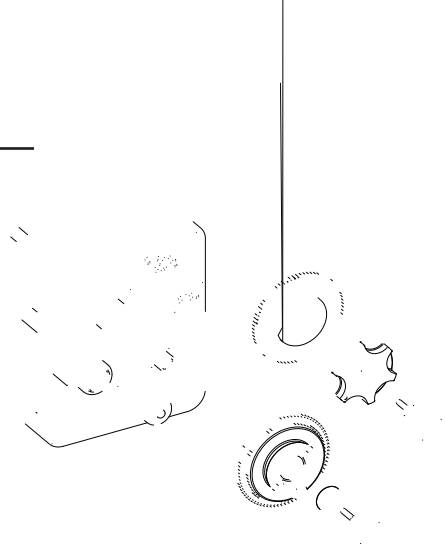

Item No.	QTY	Part No.	Description	Item No.	QTY	Part No.	Description

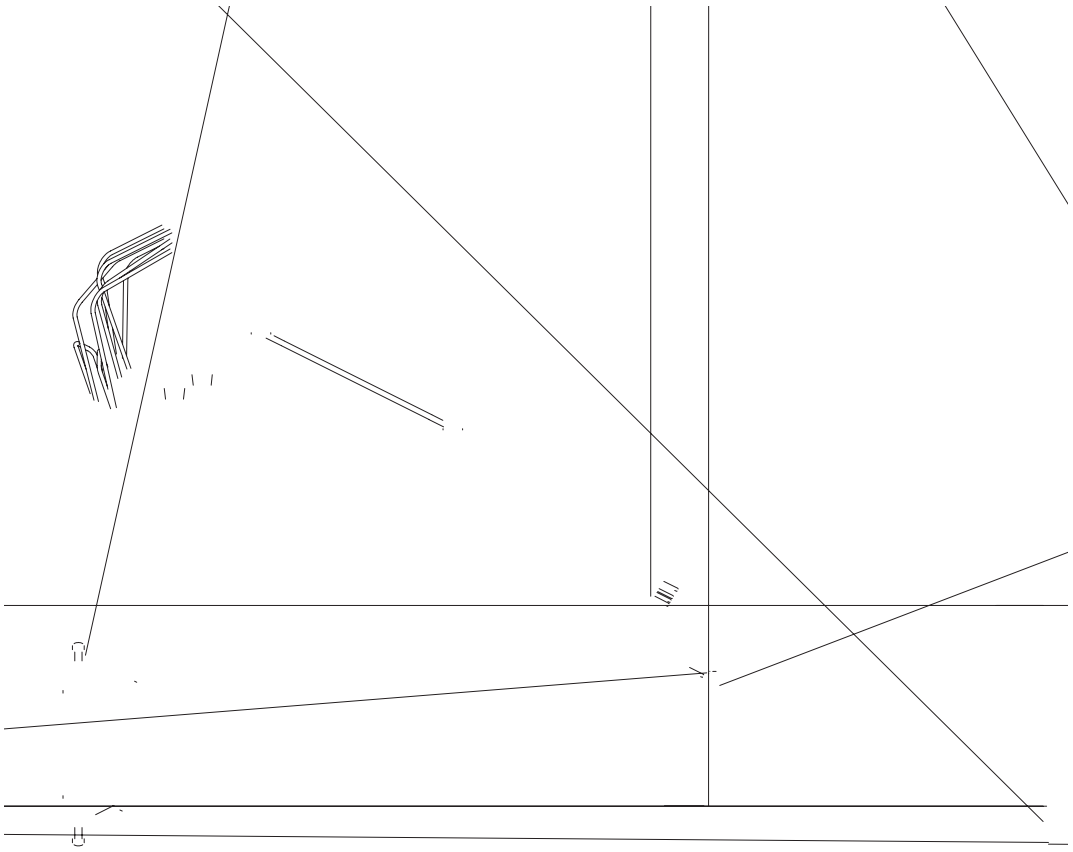

CONTROL VALVE ASSEMBLY *continued*

Item No.	QTY	Part No.	Description	Item No.	QTY	Part No.	Description

Not Shown:

Item No.	QTY	Part No.	Description

MANUAL DRIVE ASSEMBLY

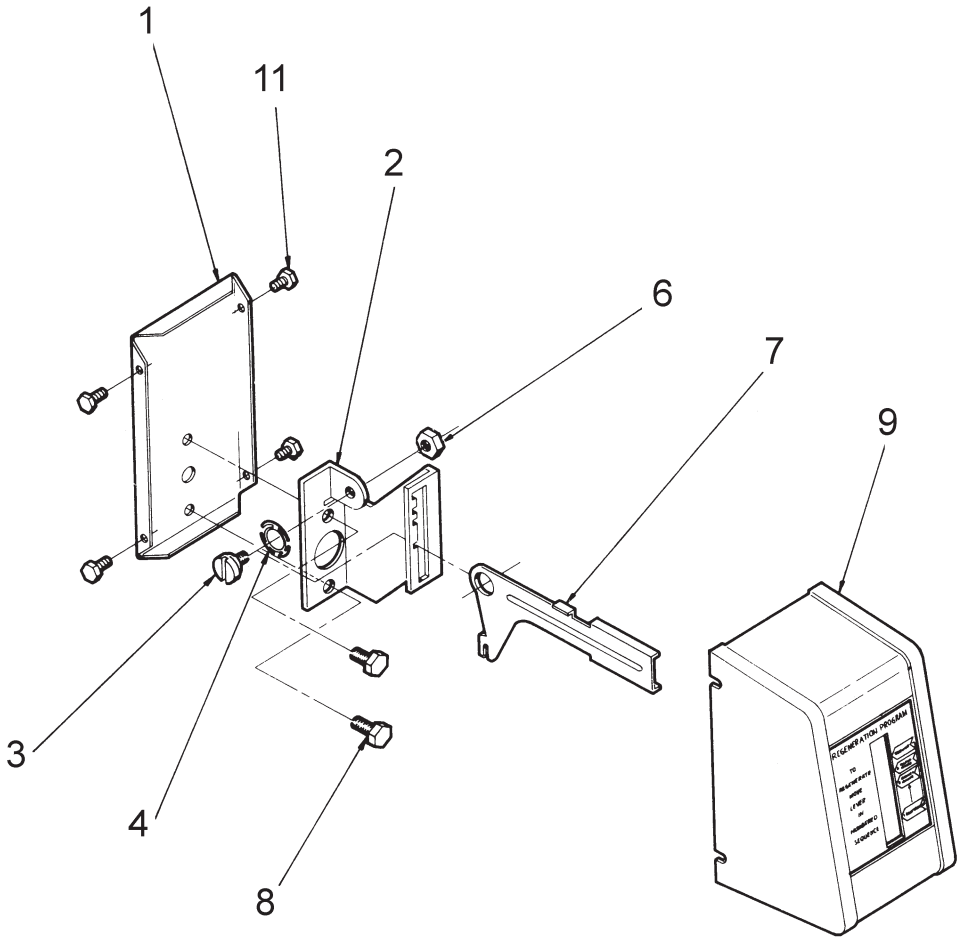

Item No.	QTY	Part No.	Description

Not Shown:

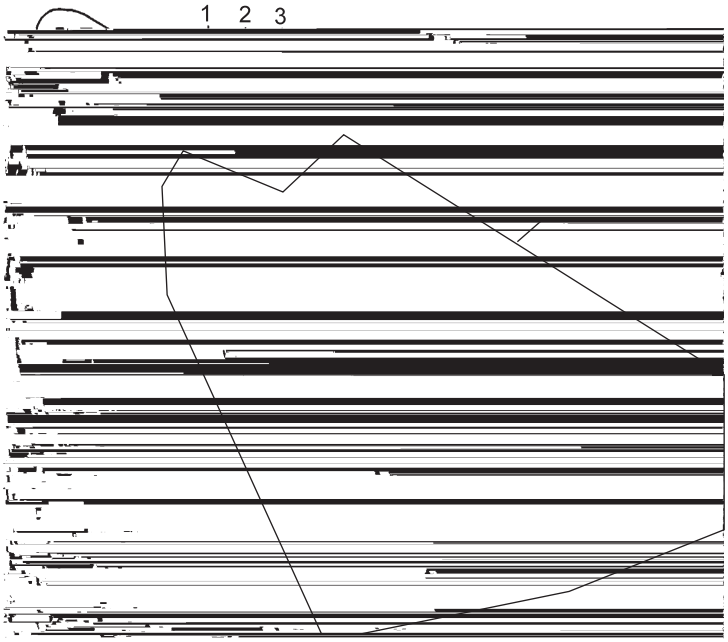

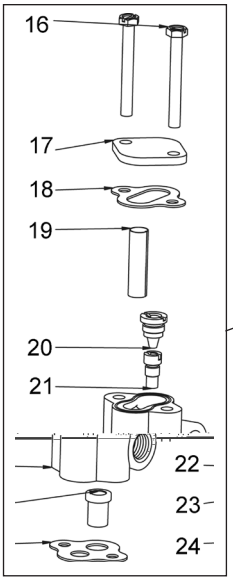

Item No.	QTY	Part No.	Description	Item No.	QTY	Part No.	Description

Item No.	QTY	Part No.	Description

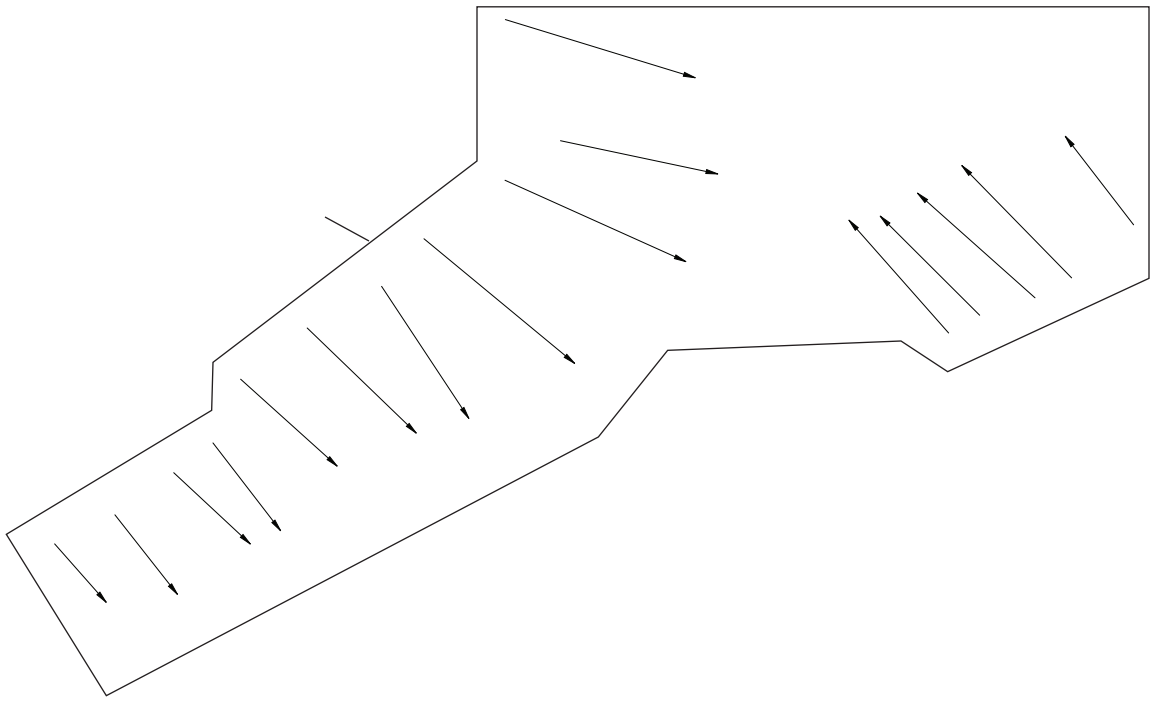

Item

continued

Item No.	QTY	Part No.	Description	Item No.	QTY	Part No.	Description

*

U

,

U I

6

F

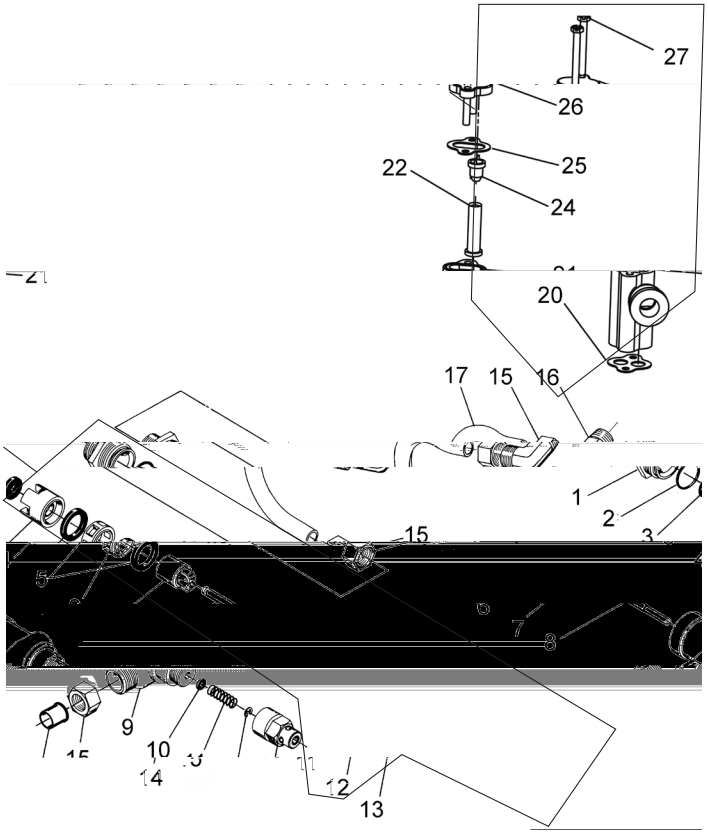

Item No.	QTY	Part No.	Description	Item No.	QTY	Part No.	Description

Not Shown:

NOTE: Item number 20 (11893) is used on injector sizes 2 through 5C. Part number 10228 is used on injector sizes 6C.

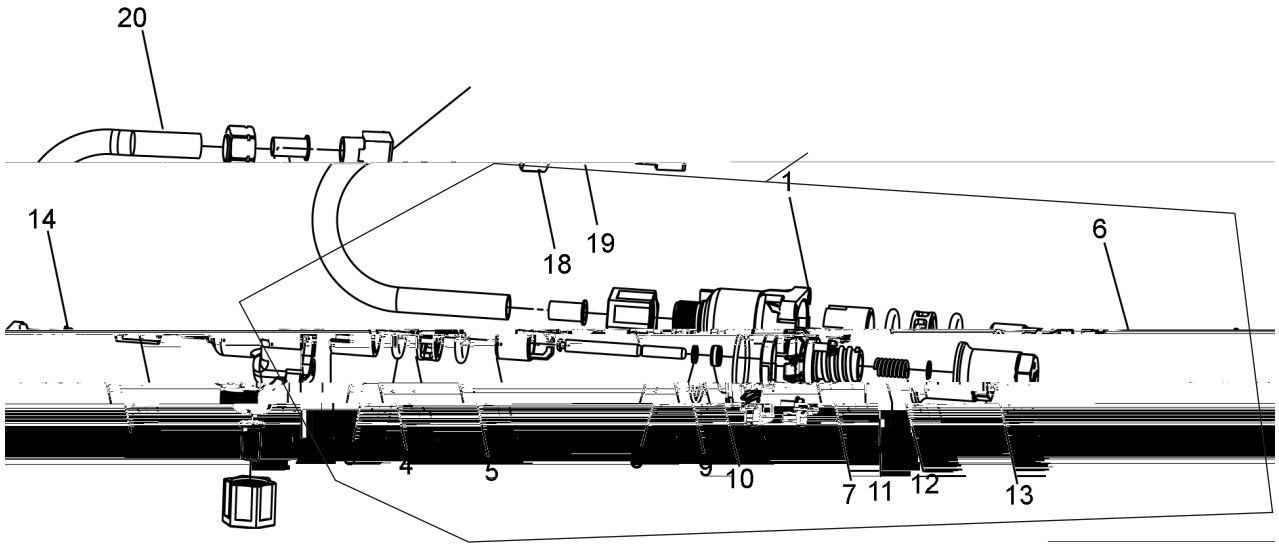

Item No.	QTY	Part No.	Description	Item No.	QTY	Part No.	Description

Not Shown

1600 SERVICE VALVE OPERATOR ASSEMBLY (OLD STYLE)

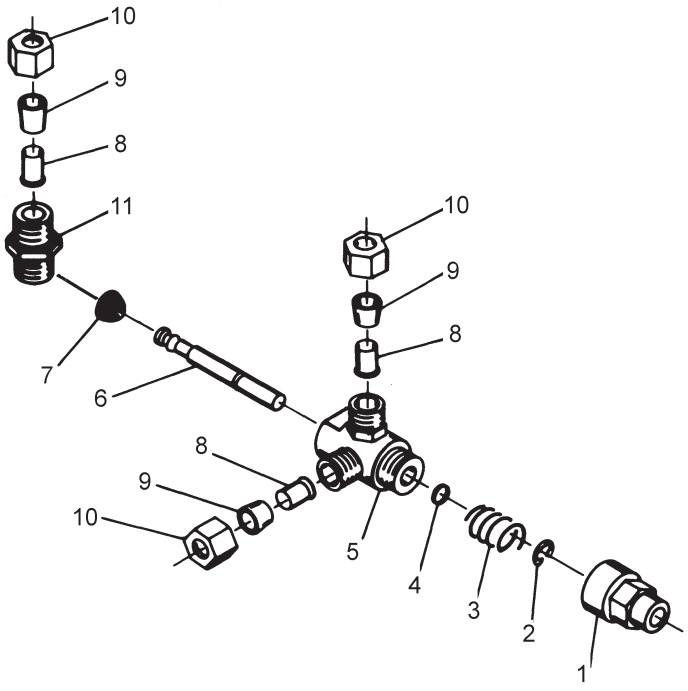

Item No.	QTY	Part No.	Description

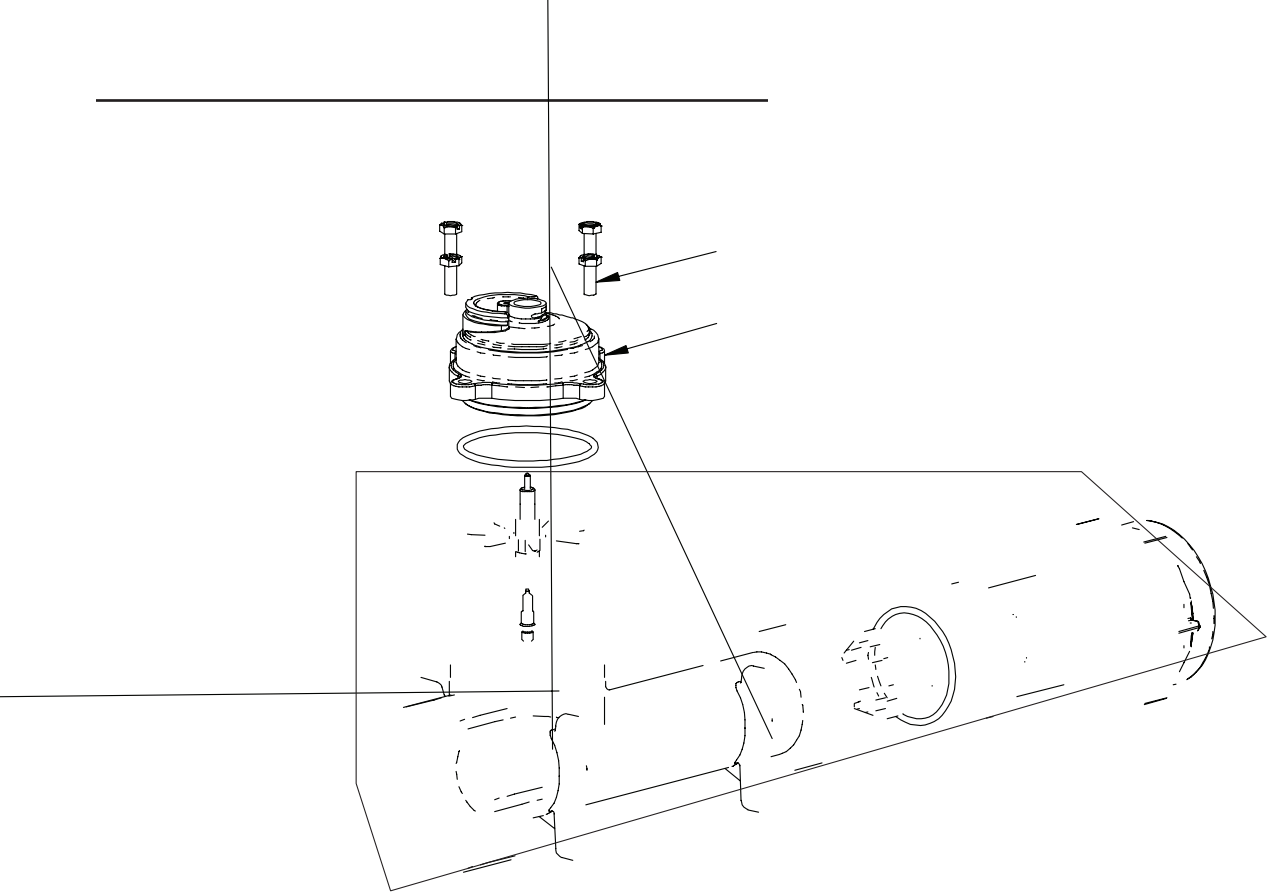

Item No.	QTY	Part No.	Description

Item No.	QTY	Part No.	Description

Not Shown

Item No.	QTY	Part No.	Description

2310 SAFETY BRINE VALVE

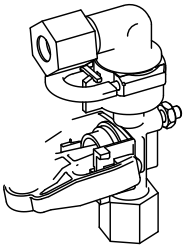

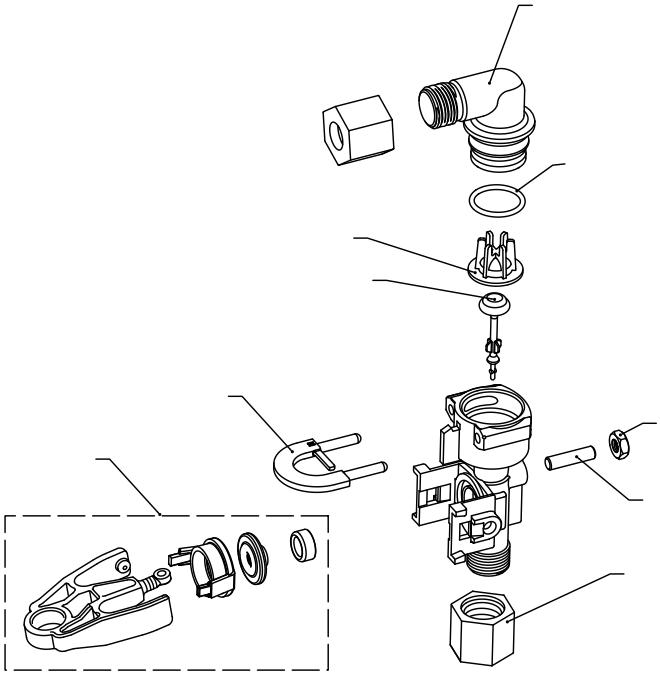

Item No.	QTY	Part No.	Description

2350 SAFETY BRINE VALVE

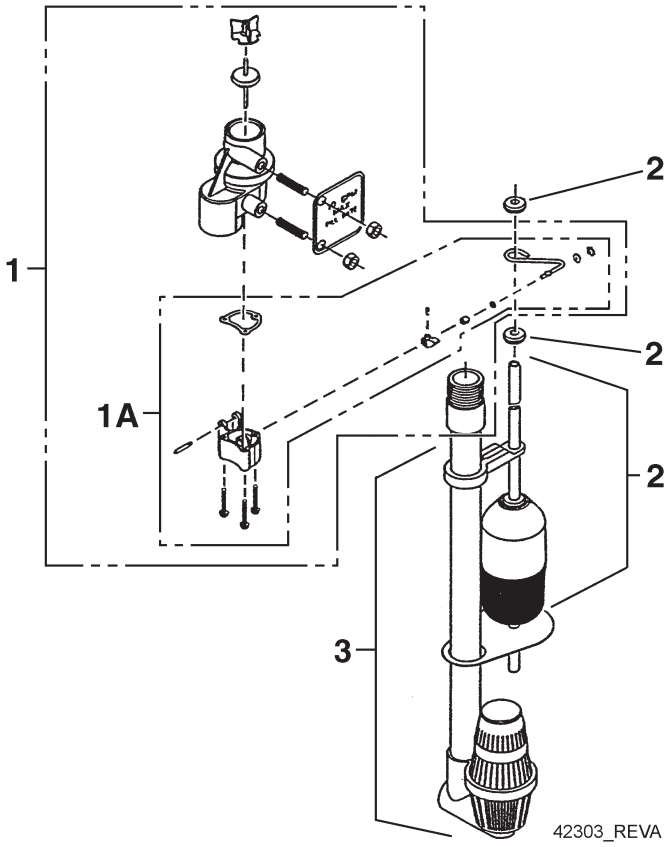

Item No.	QTY	Part No.	Description

Not Shown

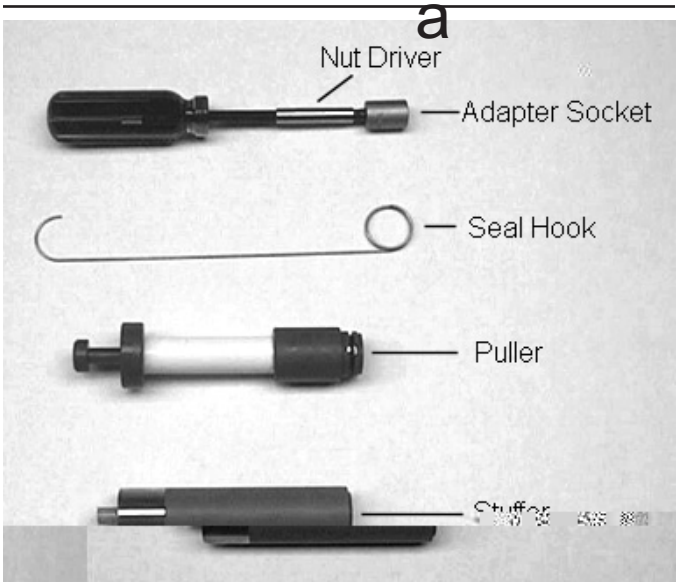

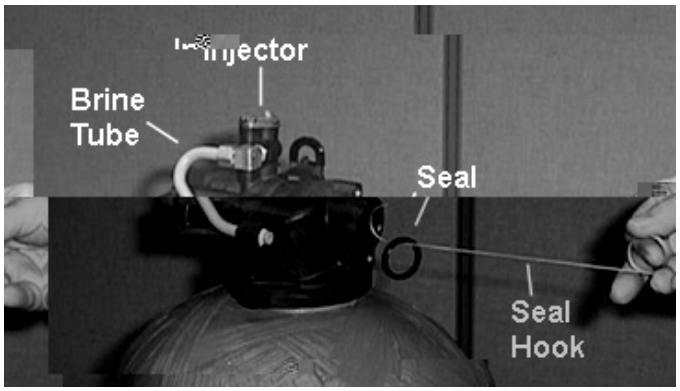

NOTE: Photos shown are for reference only for replacing the seal and spacer. Actual valve may be different.

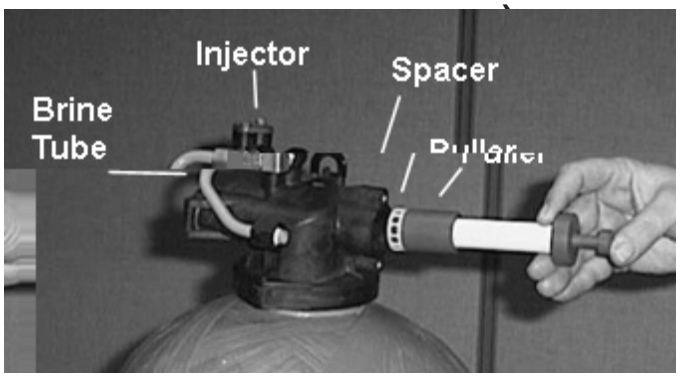

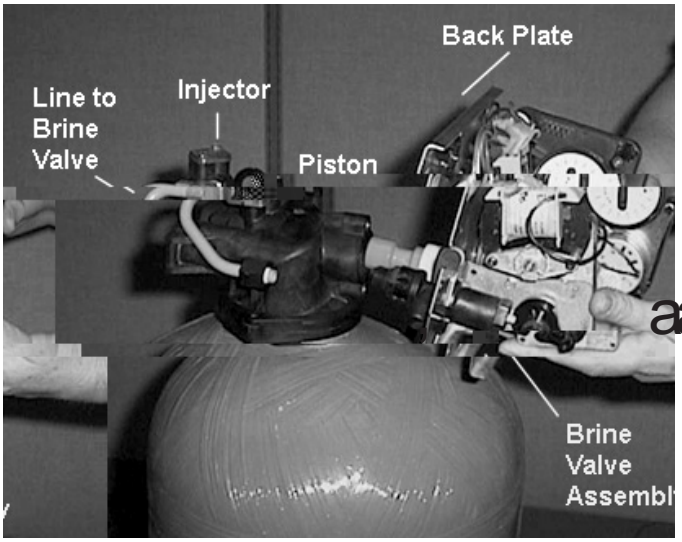

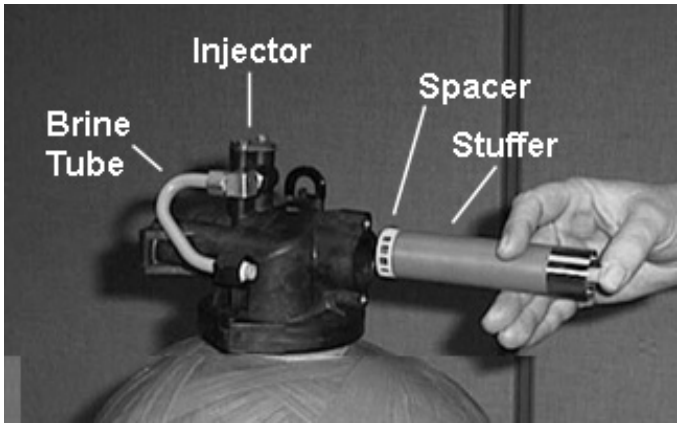

a a (

GENERAL SERVICE HINTS FOR METER

Problem: Softener delivers hard water
Reason:

Reason:

Reason: M

F

TROUBLESHOOTING

Problem	Cause	
a l a	a a a	C
	a a a	R
a l	, a,a aa a	C
a	a	C
F aa	a	C
a	a a	DC
	D	

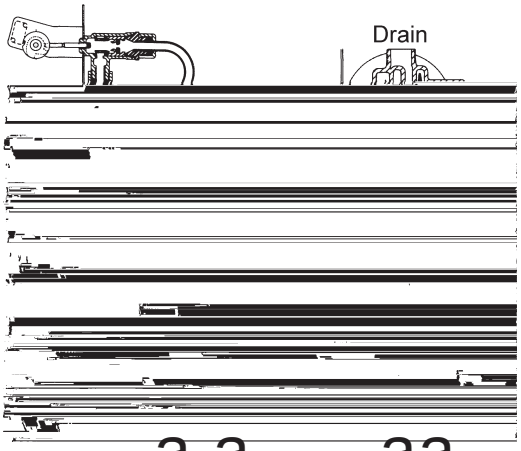

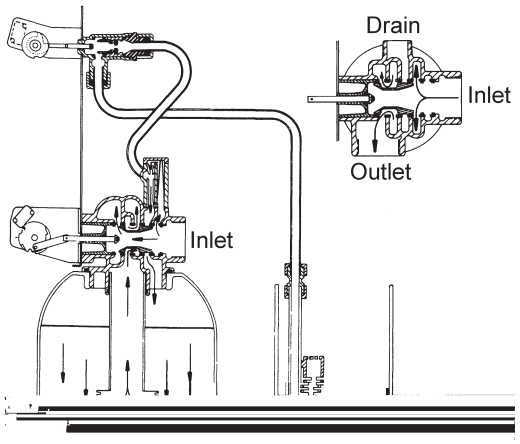

a a a , aa H H

, , a

2 Backwash Position

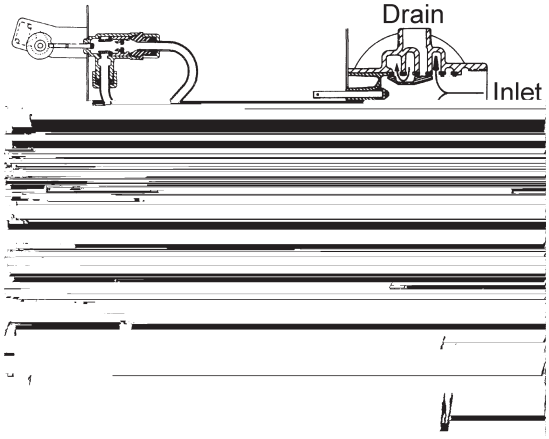

5 Rapid Rinse

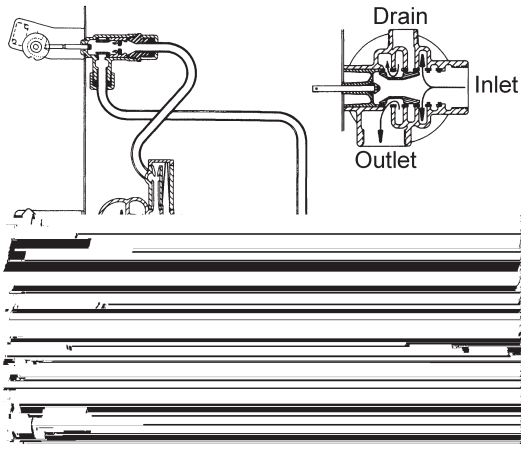

, a a , aa H H

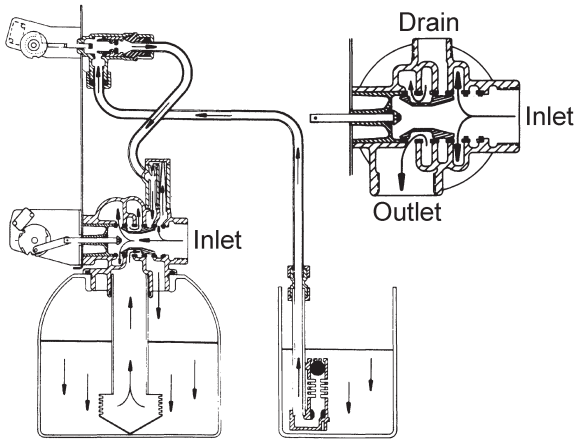

6 Brine Tank Refill Position

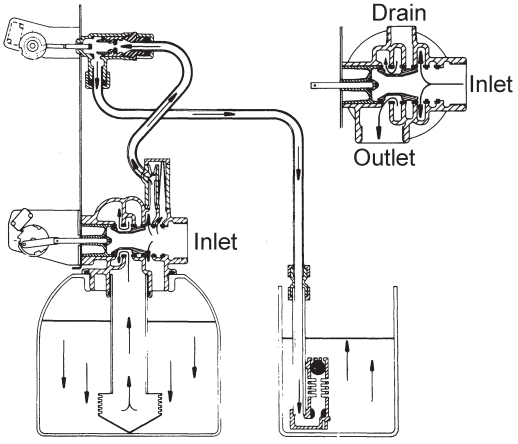

æa , a a , aa a H a H

F

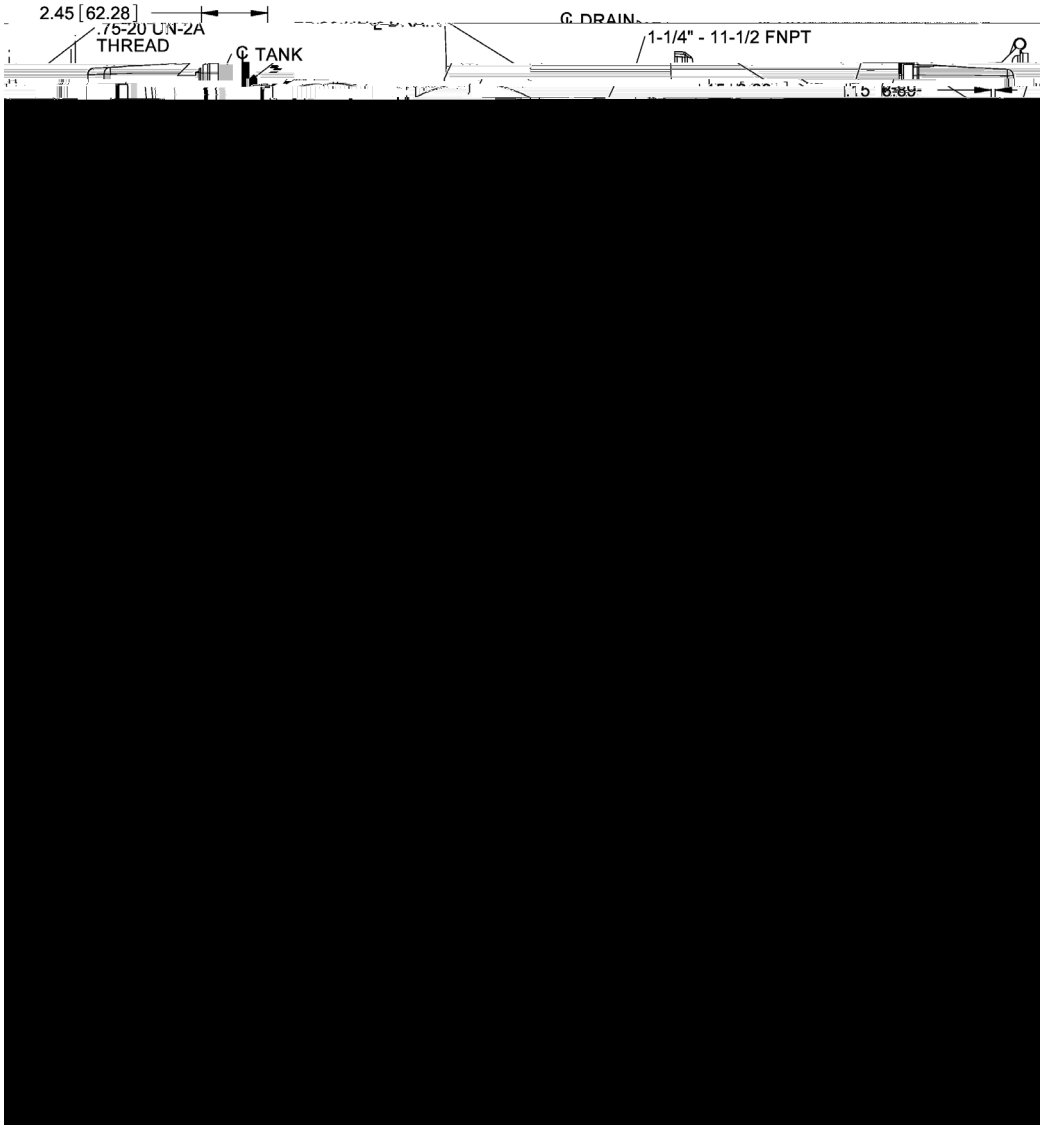
2.45 [62.28]
.75-20 UN-2A
THREAD
℄ TANK
℄ DRAIN
1-1/4" - 11-1/2 FNPT

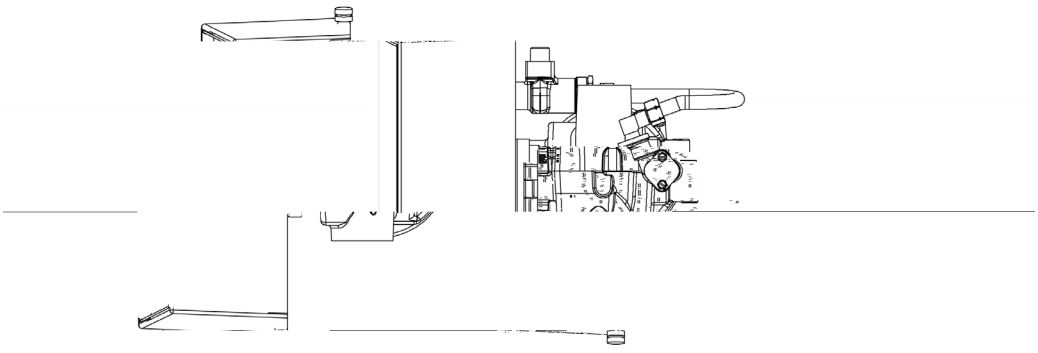

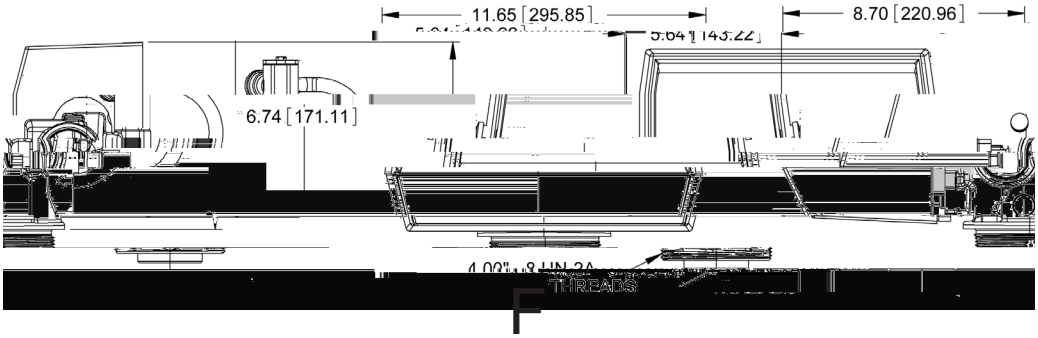
11.65 [295.85]
8.70 [220.96]
6.74 [171.11]
THREADS

Typical Single Tank Installation with Optional

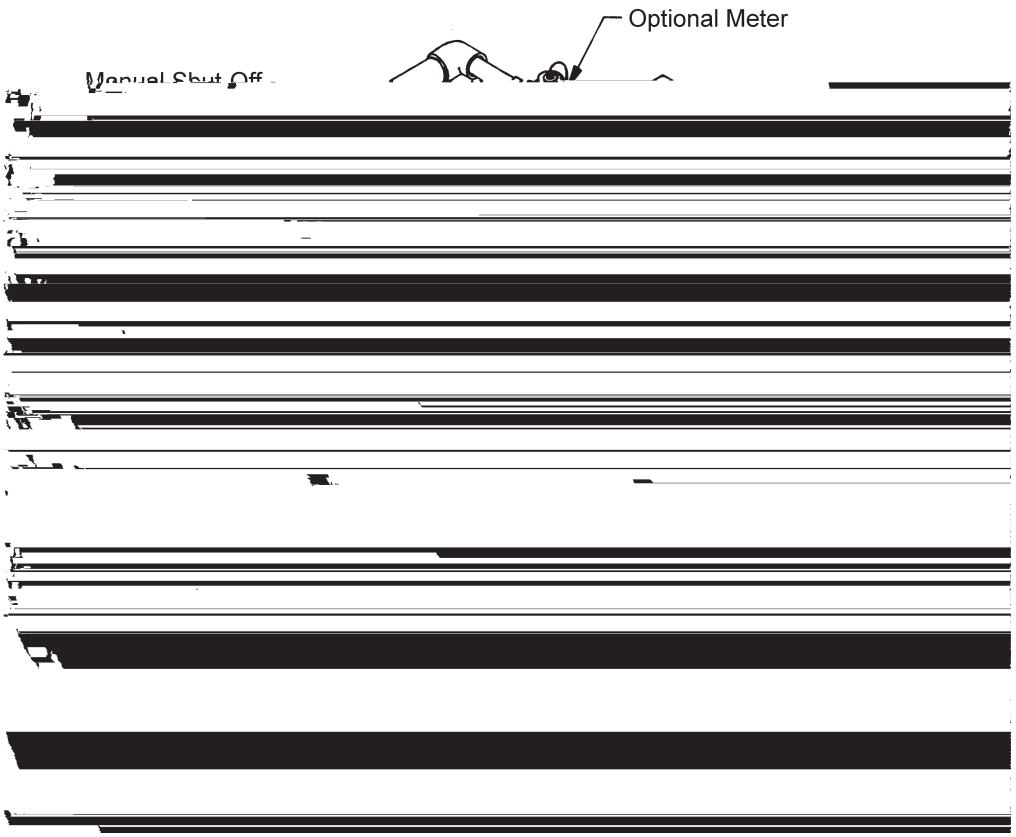

Typical Twin Tank Installation with Optional Meter Interlock and No Hard Water Bypass

Twin Series Regeneration Installation with a

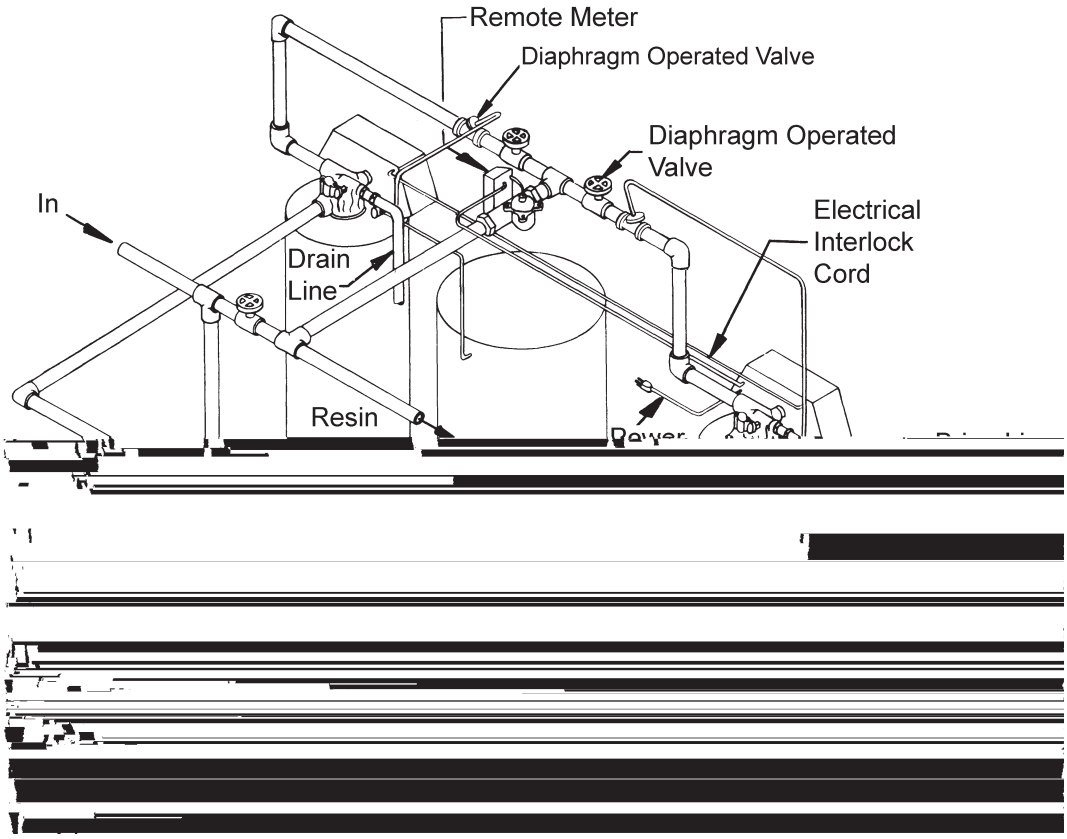

Twin Alternator Installation with a Remote Meter

Single Valve Regeneration Immediate and Delayed Valve Wiring

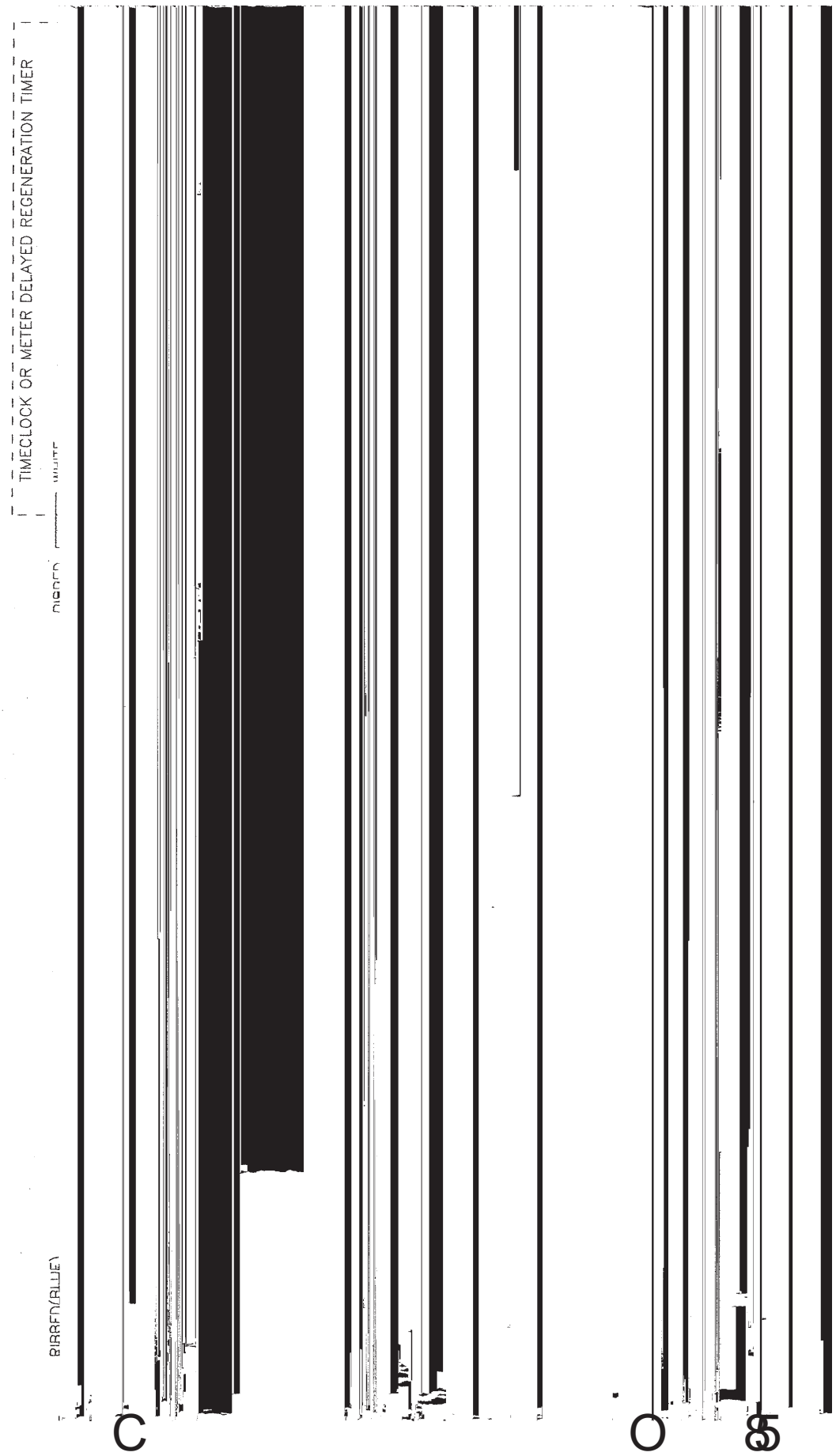

With Remote Starter Valve Wiring

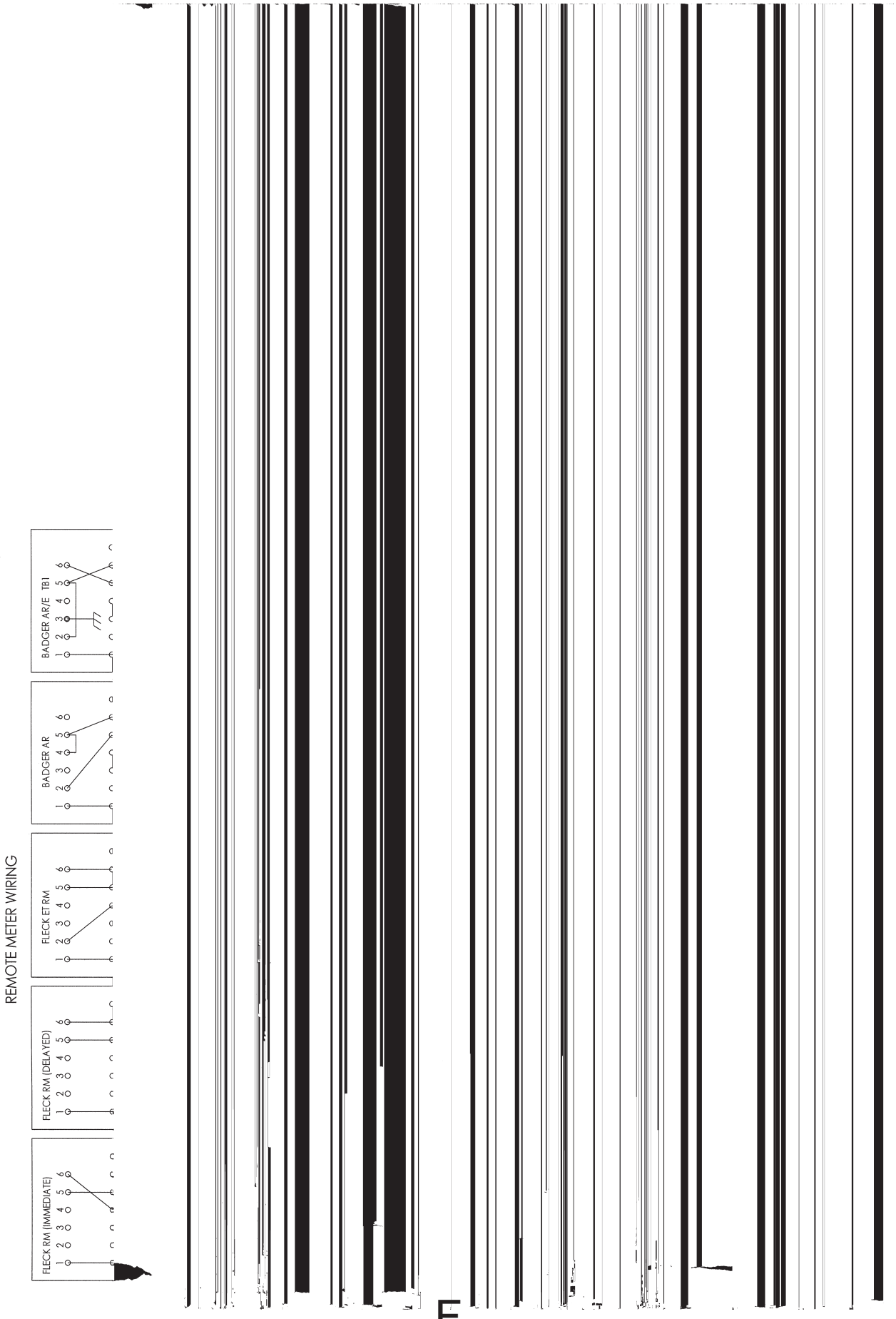

Interlocked Regeneration Valve Wiring

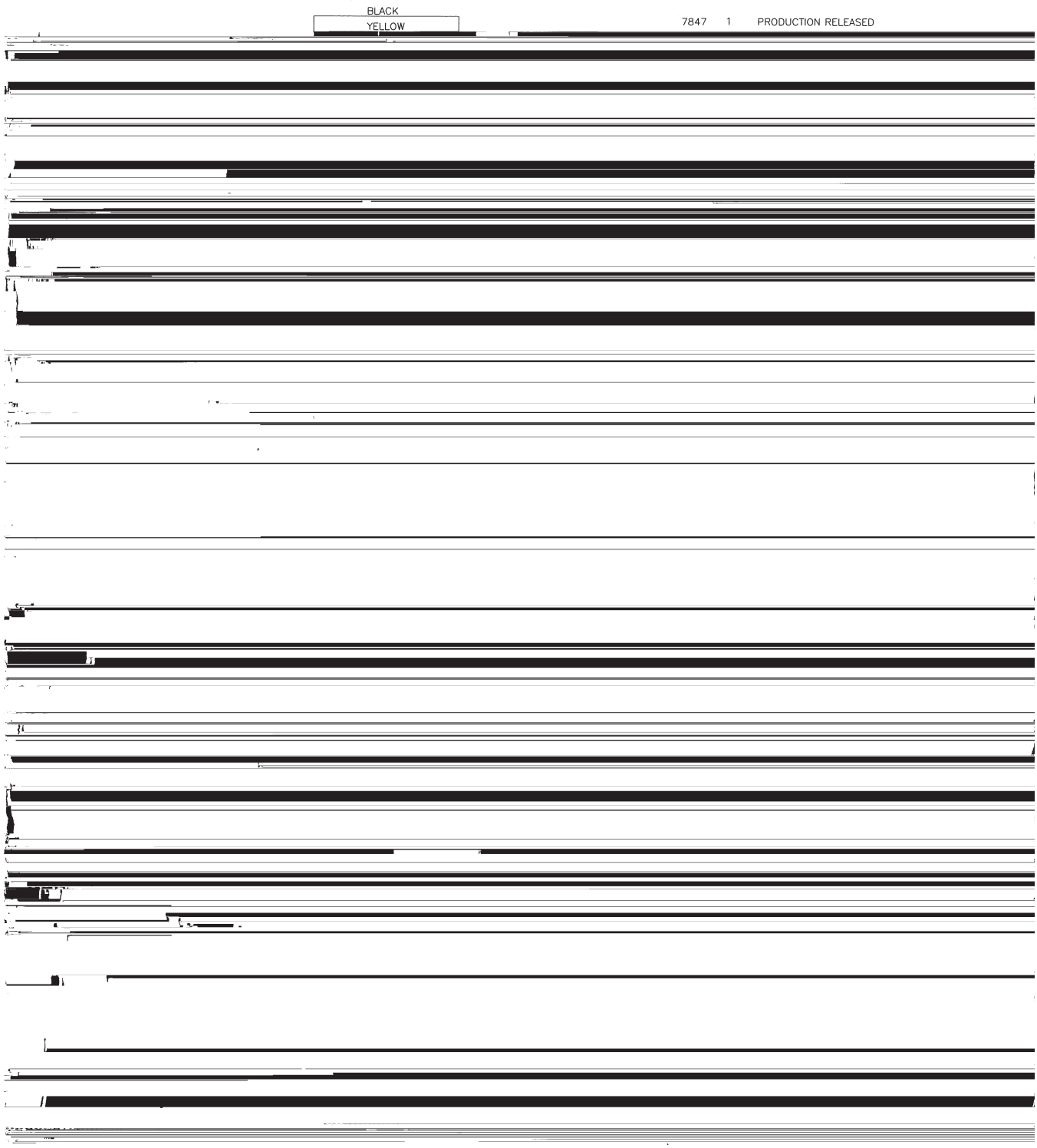

Series Regeneration Valve Wiring

Alternating Regeneration 230V / 3-Way Solenoid Output Valve Wiring

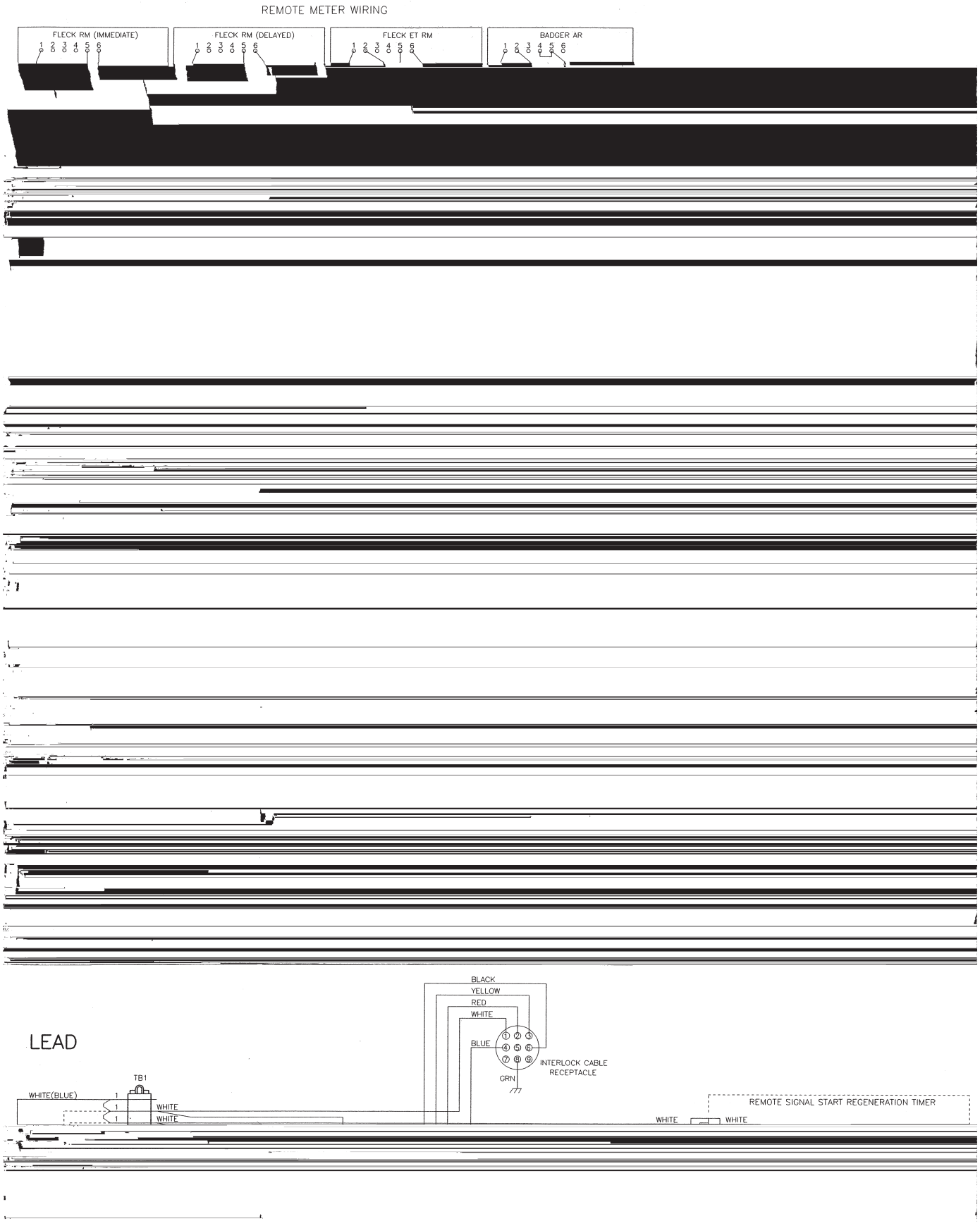

continued

Alternating Regeneration 24V / 120V / 3-Way Solenoid Output Valve Wiring

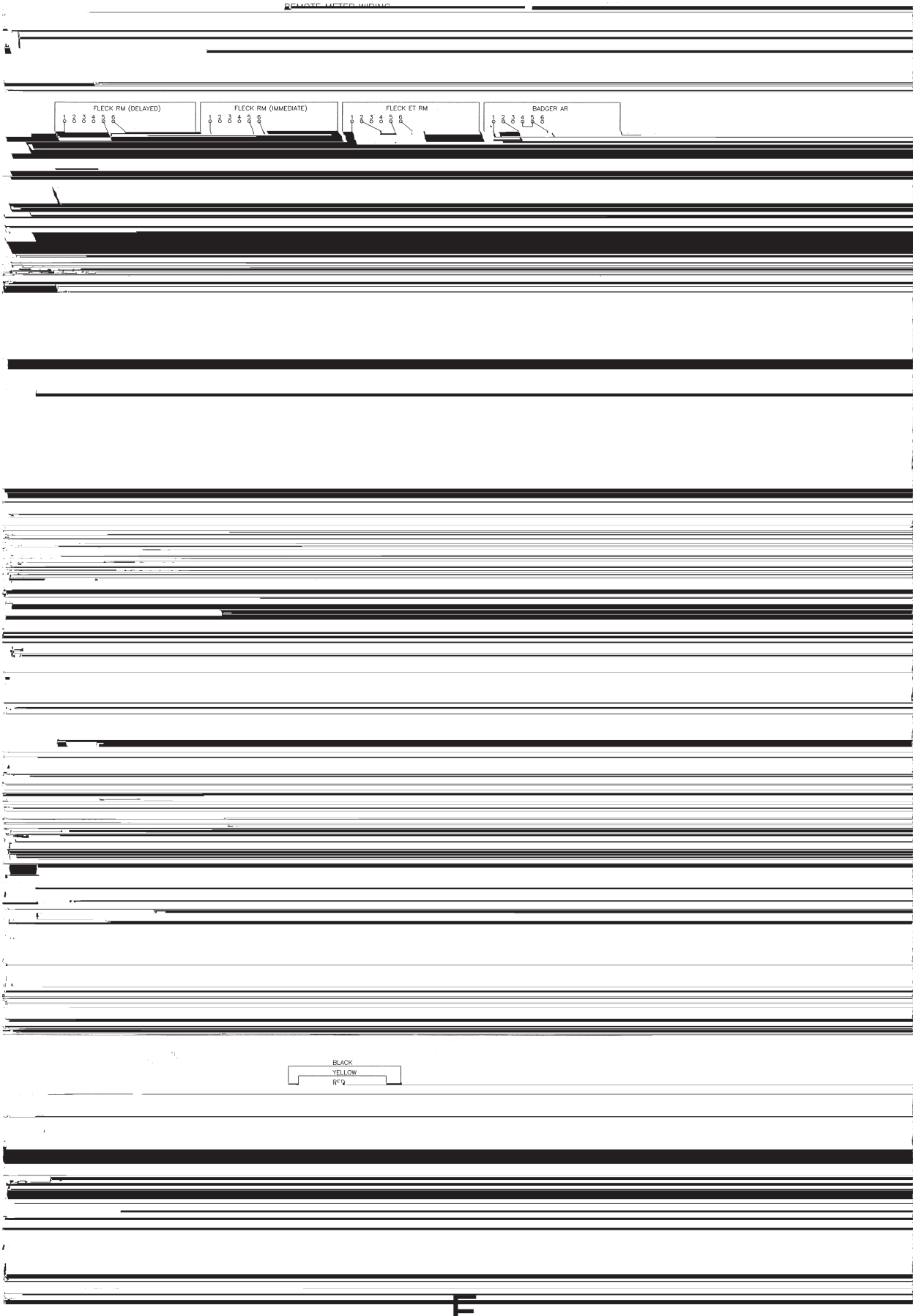

SERVICE ASSEMBLIES *continued*

Safety Brine Valves

Sales and Service Aids

Seal & Spacer Kits

Service Equipment

Service Valve Operator Assemblies (SVO)

Skipper Wheel Assemblies

C O 35

F